REVISIONS					
SYM	ZONE	LTR	DESCRIPTION	DATE	APPROVED
		A	(1-12) SEE EO [illegible]	[illegible] 70	[illegible]
		B	(1-13) SEE EO [illegible]	4 [illegible] 70	[illegible]
		C	(1-3) SEE EO [illegible]	18 [illegible] 70	[illegible]

NOTES:

1. FINISH $\overset{25}{\checkmark}$ UNLESS OTHERWISE SPECIFIED.
2. ALL EDGES SHALL BE BROKEN .005 + .010 UNLESS OTHERWISE SPECIFIED.
3. INSIDE CORNER RADII .015 – .010 UNLESS OTHERWISE SPECIFIED.
4. MATERIAL:
   - A. FOR WROUGHT MATERIAL: AL ALY, 2024, TEMPER T4, SPEC QQ-A-225/6. Ⓐ
   - B. FOR FORGING MATERIAL: AL ALY, 6151, TEMPER T6, SPEC QQ-A-367.
5. FINAL PROTECTIVE FINISH: ANODIC FILM, TYPE III, CLASS 2, MIL-A-8625. SEAL IN 1 1/4 % AQUEOUS SOLUTION OF NICKEL ACETATE AT 180°F FOR 10 MINUTES. COLOR BLACK NO. 37038 TO DARK GRAY NO. 36081 OF FED-STD-595 Ⓑ

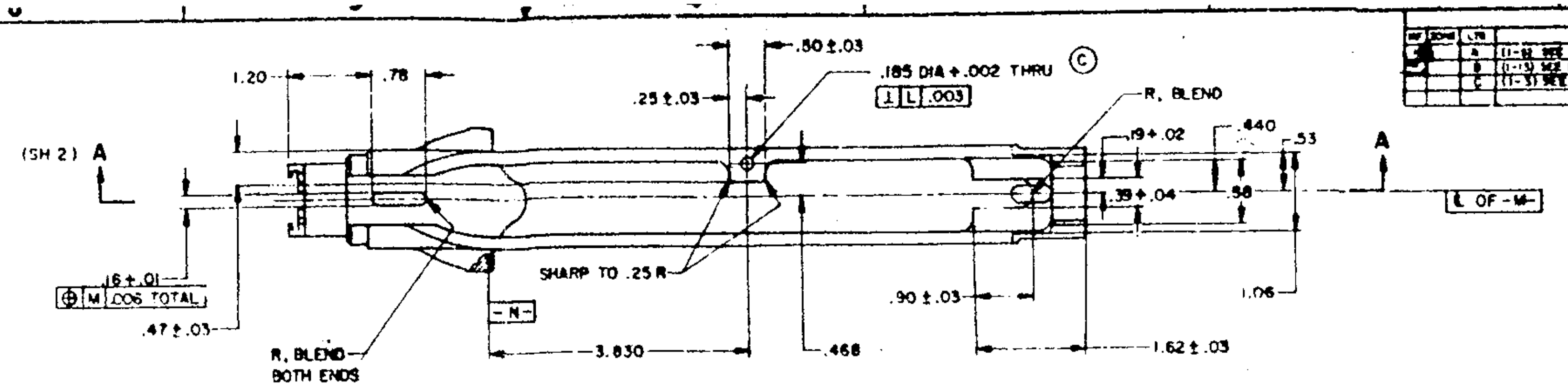

(SH 2) A
A
1.20
.78
.25 ± .03
.50 ± .03
.185 DIA + .002 THRU Ⓒ
⊥ L .003
R, BLEND
.19 + .02
.440
.53
.39 + .04
.58
℄ OF -M-
1.06
.16 ± .01
⊕ M .006 TOTAL
.47 ± .03
SHARP TO .25 R
-N-
R, BLEND BOTH ENDS
3.830
.468
.90 ± .03
1.62 ± .03

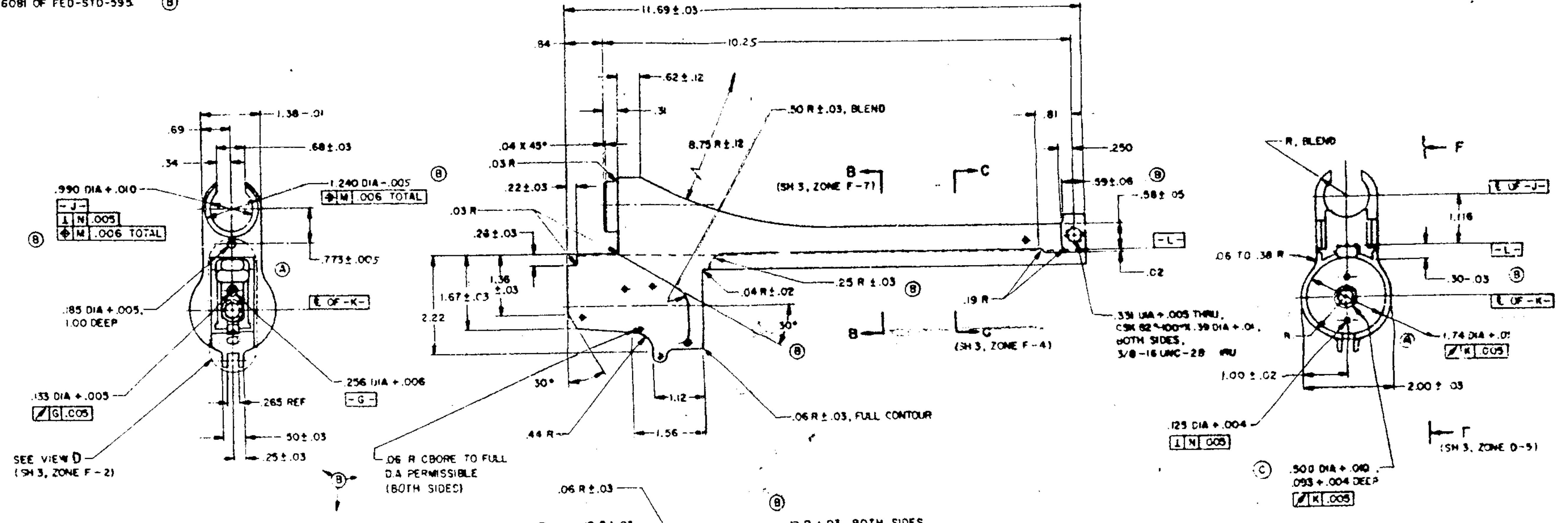

.69
.34
1.38 – .01
.68 ± .03
.990 DIA + .010
1.240 DIA – .005
⊕ M .006 TOTAL
Ⓑ
-J-
⊥ N .005
⊕ M .006 TOTAL
Ⓑ
.773 ± .005
Ⓐ
.185 DIA + .005, 1.00 DEEP
℄ OF -K-
.133 DIA + .005
⌭ G .005
.265 REF
.256 DIA + .006
-G-
.50 ± .03
.25 ± .03
SEE VIEW D (SH 3, ZONE F-2)
Ⓑ
11.69 ± .03
.84
10.25
.62 ± .12
.31
.50 R ± .03, BLEND
8.75 R ± .12
.81
.250
.04 X 45°
.03 R
.22 ± .03
.03 R
.28 ± .03
1.36 ± .03
1.67 ± .03
2.22
B
(SH 3, ZONE F-7)
C
.59 ± .06 Ⓑ
.58 ± .05
-L-
.02
.25 R ± .03 Ⓑ
.04 R ± .02
30°
Ⓑ
.19 R
.331 DIA + .005 THRU, CSK 82° – 100° X .39 DIA + .01, BOTH SIDES, 3/8-16 UNC-2B THRU
B
C
(SH 3, ZONE F-4)
30°
.44 R
1.12
1.56
.06 R ± .03, FULL CONTOUR
.06 R CBORE TO FULL DIA PERMISSIBLE (BOTH SIDES)
R, BLEND
F
℄ OF -J-
1.116
-L-
.06 TO .38 R
.30 – .03 Ⓑ
℄ OF -K-
R
Ⓐ
1.74 DIA + .01
⌭ K .005
1.00 ± .02
2.00 ± .03
.125 DIA + .004
⊥ N .005
F
(SH 3, ZONE D-5)
Ⓒ
.500 DIA + .010, .093 + .004 DEEP
⌭ K .005

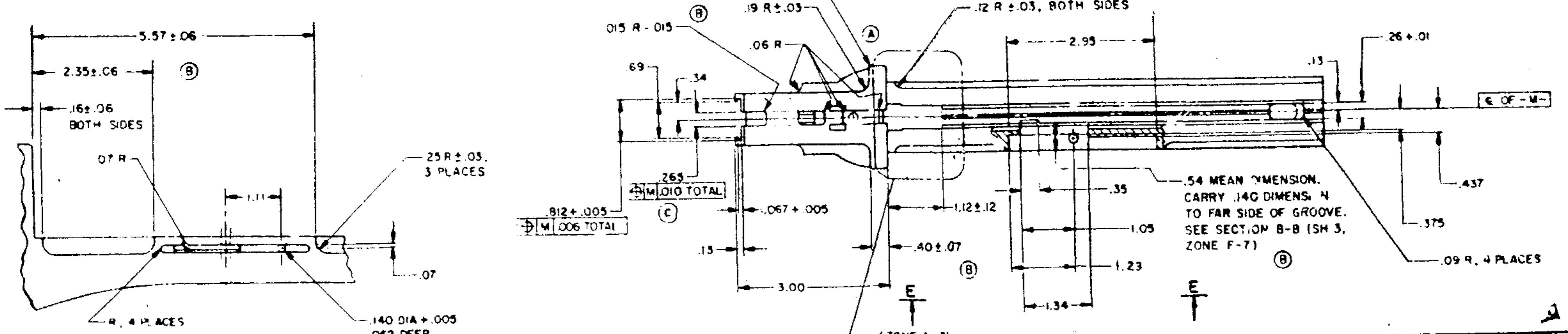

5.57 ± .06
2.35 ± .06 Ⓑ
.16 ± .06 BOTH SIDES
.07 R
1.11
.25 R ± .03, 3 PLACES
.07
R, 4 PLACES
.140 DIA + .005 .062 DEEP, FLAT BOTTOM
.06 R ± .03
Ⓑ
.015 R – .015 Ⓑ
.19 R ± .03
Ⓐ
.12 R ± .03, BOTH SIDES
.06 R
.69
.34
2.95
.26 + .01
.13
℄ OF -M-
.265
⊕ M .010 TOTAL
Ⓒ
.812 + .005
⊕ M .006 TOTAL
.067 + .005
1.12 ± .12
.35
.54 MEAN DIMENSION. CARRY .140 DIMENSION TO FAR SIDE OF GROOVE. SEE SECTION B-B (SH 3, ZONE F-7) Ⓑ
.437
.375
1.05
.15
.40 ± .07
Ⓑ
1.23
.09 R, 4 PLACES
3.00
1.34
E
E

VIEW E – E
(SH 1, ZONE B-4)

(ZONE A-7)

SEE VIEW R
(SH 2, ZONE C-2) Ⓐ

PART NO 8448338

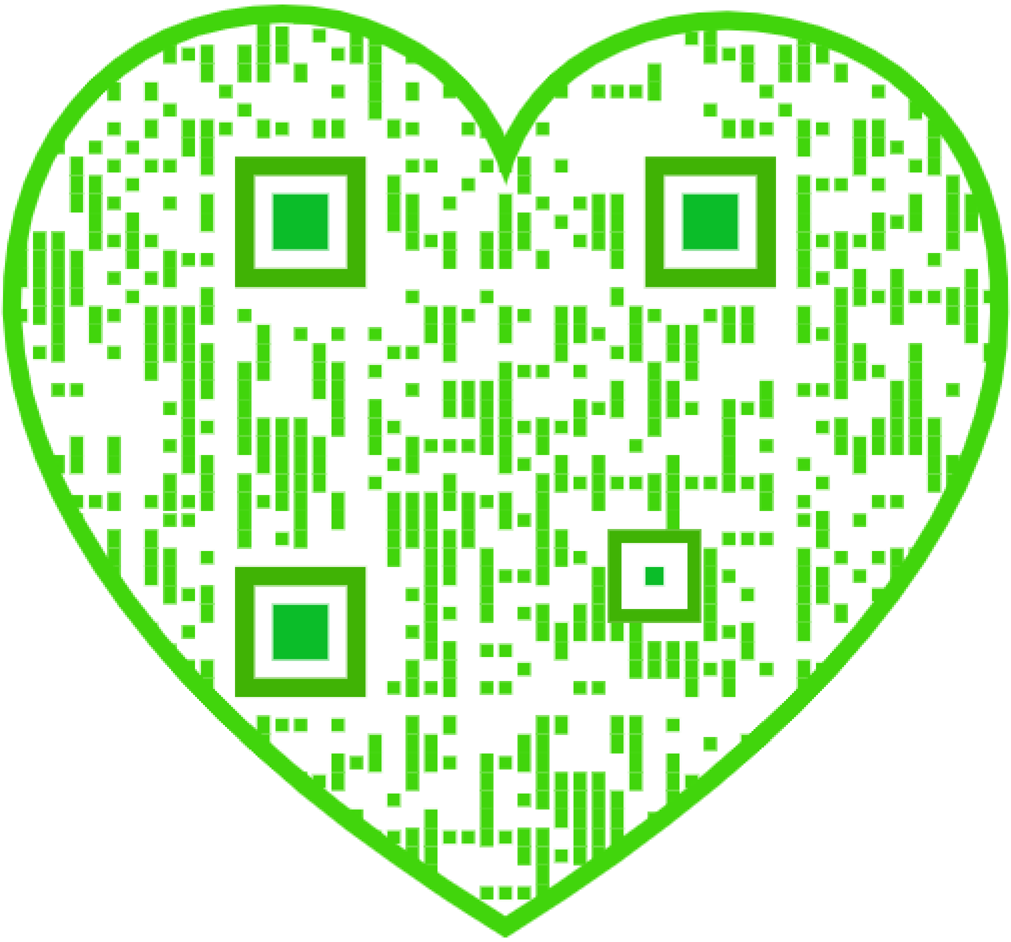MECHANICAL PROPERTIES			UNLESS OTHERWISE SPECIFIED DIMENSIONS ARE IN INCHES	ORIGINAL DATE OF DRAWING 1 AUG 69	DEPT OF THE ARMY ROCK ISLAND ARSENAL, ROCK ISLAND, ILL. 61201
			TOLERANCES ON DECIMALS .XX ± .01 .XXX ± .005 ANGLES ± 2°		RECEIVER
	8448380	LAUNCHER, GRENADE, 40 MM: M 203	MATERIAL SEE NOTE 4	SUBMITTED	
			HEAT TREATMENT ———	APPROVED	F 19204 8448338
	NEXT ASSY	USED ON	FINAL PROTECTIVE FINISH SEE NOTE 5		SCALE 1/1 SHEET 1 OF 3
	APPLICATION